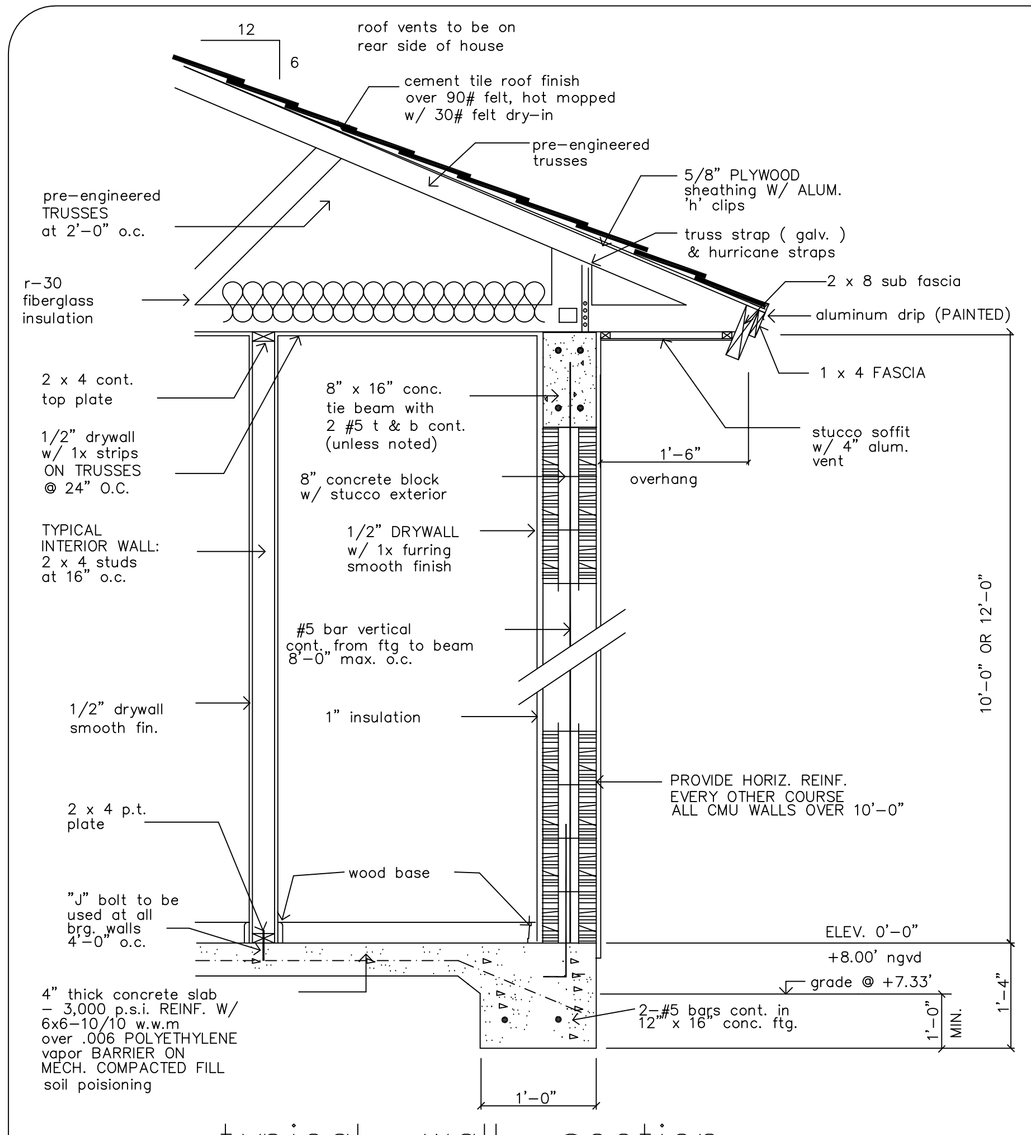

typical wall section

n.t.s

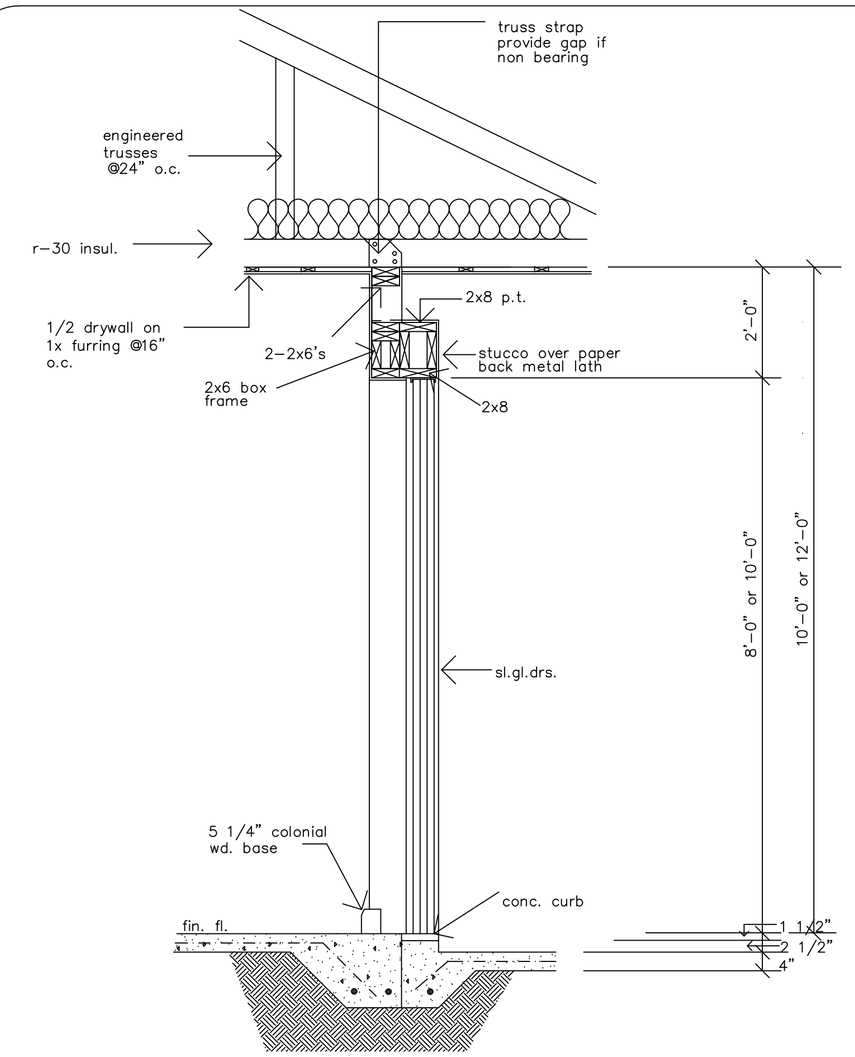

pkt. sl. gl. drs. on ext. track

scale: 3/4" = 1'-0"

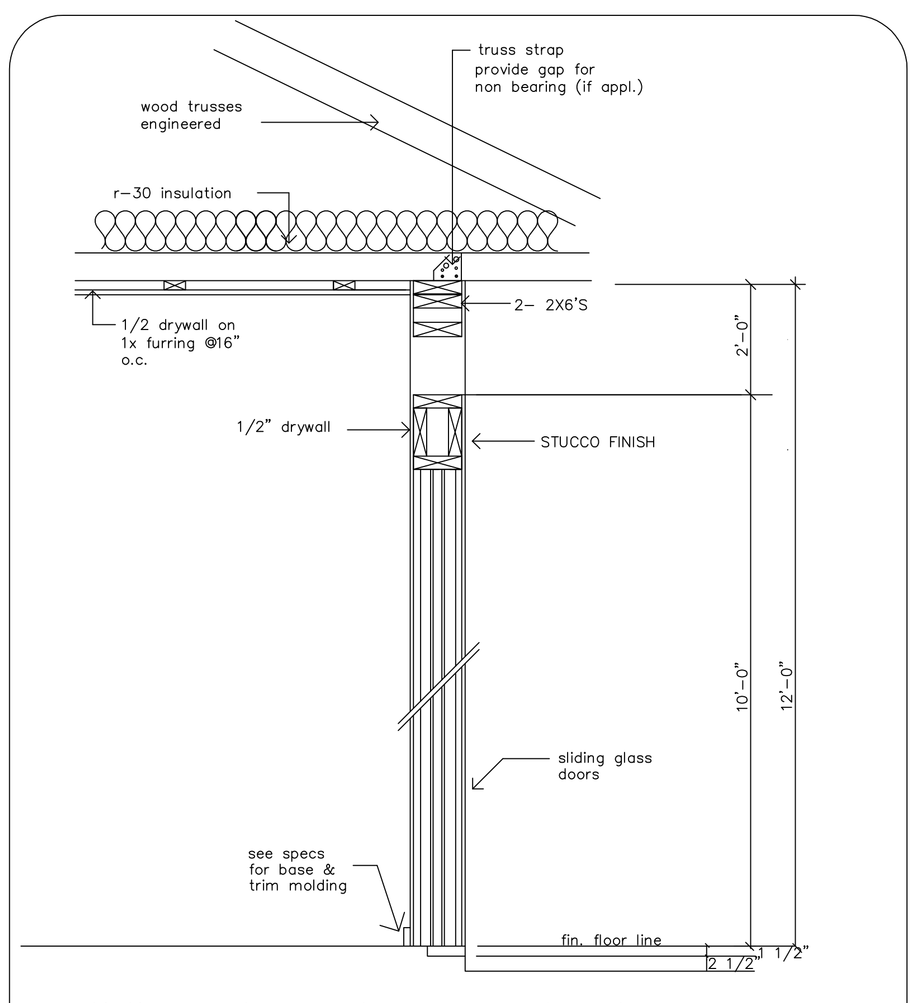

sliding glass doors under beam

scale: n.t.s

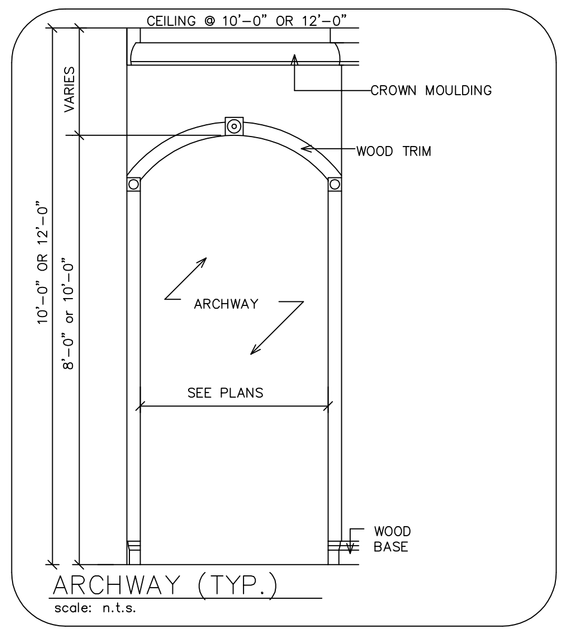

ARCHWAY (TYP.)

scale: n.t.s.

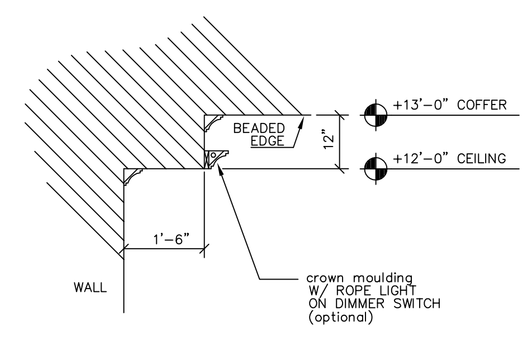

FORMAL LIVING & DINING ROOM

SCALE: N.T.S.

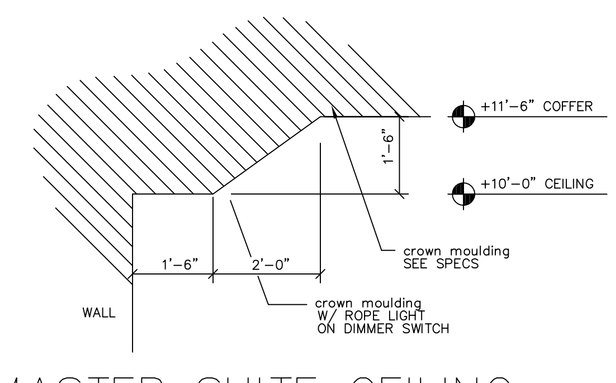

MASTER SUITE CEILING

SCALE: 1/2" = 1'-0"

COPYRIGHT NOTICE

ALL HOMES SOLD THROUGH BOYATTPLANS.COM ARE PROTECTED BY COPYRIGHT. REPRODUCTION OF THESE HOME PLANS, EITHER IN WHOLE OR IN PART, INCLUDING ANY FORM OF COPYING AND/OR PREPARATION OF DERIVATIVE WORKS THEREOF, FOR ANY REASON WITHOUT PRIOR WRITTEN PERMISSION, IS STRICTLY PROHIBITED. THE PURCHASE OF A SET OF HOME PLANS IN NO WAY TRANSFERS ANY COPYRIGHT OR OTHER OWNERSHIP INTEREST IN IT TO THE BUYER EXCEPT FOR A LIMITED LICENSE TO USE THAT SET OF HOME PLANS FOR THE CONSTRUCTION OF ONE, AND ONLY ONE, DWELLING UNIT. THE PURCHASE OF ADDITIONAL SETS OF THAT HOME PLAN AT A REDUCED PRICE FROM THE ORIGINAL SET OR AS PART OF A MULTIPLE SET PACKAGE DOES NOT CONVEY TO THE BUYER A LICENSE TO CONSTRUCT MORE THAN ONE DWELLING.

SIMILARLY, THE PURCHASE OF REPRODUCIBLE HOME PLANS (VELLUMS, MYLARS OR ELECTRONIC FILES) CARRIES THE SAME COPYRIGHT PROTECTION AS MENTIONED ABOVE. IT IS GENERALLY ALLOWABLE TO MAKE UP TO A MAXIMUM OF 14 COPIES FOR THE CONSTRUCTION OF A SINGLE DWELLING ONLY. TO USE ANY PLAN MORE THAN ONCE, AND TO AVOID ANY COPYRIGHT/LICENSE INFRINGEMENT, IT IS NECESSARY TO CONTACT THE PLAN DESIGNER TO RECEIVE RELEASE AND LICENSE FOR ANY EXTENDED USAGE. WHEREAS, A PURCHASER OF REPRODUCIBLE VELLUMS IS GRANTED A LICENSE TO MAKE COPIES, AND TO ALSO MAKE MODIFICATIONS/REVISIONS IN ORDER TO CUSTOMIZE THE HOME AS THEY SEE FIT, MAKING COPIES FROM NORMAL BLUEPRINTS IS ILLEGAL!

COPYRIGHT AND LICENSING OF HOME PLANS FOR CONSTRUCTION EXISTS TO PROTECT ALL PARTIES. IT RESPECTS AND SUPPORTS THE INTELLECTUAL PROPERTY AND DIGNITY OF THE ORIGINAL DESIGNER.

COPYRIGHT LAW HAS BEEN REINFORCED OVER THE PAST FEW YEARS. WILLFUL INFRINGEMENT COULD CAUSE SETTLEMENTS FOR STATUTORY DAMAGES UP TO BUT NOT LIMITED TO $1,000,000.00 PLUS ATTORNEY FEES, DAMAGES AND LOSS OF PROFITS.

SPECIAL NOTE: COPYRIGHT/LICENSE RELEASE FORM IS NONTRANSFERABLE FROM ITS ORIGINAL ISSUANCE PARTY.

THESE PLANS ARE TO BE CONSIDERED AS CONCEPTUAL ARCHITECTURAL DRAWINGS ONLY AND SHALL NOT BE CONSTRUED AS A FINAL SET OF ENGINEERED DOCUMENTS FOR CONSTRUCTION PURPOSES. IT SHALL BE THE RESPONSIBILITY OF THE PURCHASER/OWNER TO HAVE THE DRAWINGS REVIEWED BY AN ARCHITECT, ENGINEER, CERTIFIED DESIGNER, AND/OR GENERAL CONTRACTOR, LICENSED TO PRACTICE IN THAT PARTICULAR GEOGRAPHICAL AREA IN WHICH THESE PLANS ARE TO BE USED; TO AQUIRE THE NECESSARY INFORMATION OR ADDITIONAL DRAWINGS (I.E. STRUCTURAL TO INCLUDE FOUNDATION, FLOOR/ROOF TRUSS DESIGNS MECHANICAL, ELECTRICAL, ETC.) REQUIRED FOR ACTUAL CONSTRUCTION AND BUILDING PERMIT PURPOSES. WALL SECTIONS AND DETAILS SHOWN ARE FOR DESIGN COORDINATION PURPOSES ONLY. EXACT WALL/ROOF MATERIAL COMPOSITION AND DETAILING OF MATERIALS (INCLUDING WATERPROOFING AND FLASHING) SHALL BE DETERMINED BY THE PURCHASER/OWNER OR GENERAL CONTRACTOR AT THE TIME OF CONSTRUCTION.

THESE PLANS MUST BE THOROUGHLY REVIEWED BY A LICENSED ARCHITECT, PROFESSIONAL ENGINEER, CERTIFIED RESIDENTIAL DESIGNER OR A GENERAL CONTRACTOR LICENSED TO PRACTICE IN THE GEOGRAPHICAL AREA IN WHICH THESE PLANS WILL BE USED.

PLAN NAME: VILLA DE PALERMO

PLAN NUMBER: BGH-1001-2

BOYATTPLANS.COM
3387 East 1st Street Suite C
Blue Ridge, Georga 30513
Ph. 1-866-209-0247
www.boyattplans.com

PLANS DESIGNED BY BOYATT DESIGN CORP.

DESIGNER DISCLAIMER: BOYATTPLANS.COM has put substantial care and effort into this home design and the completion of these construction drawings. However, BOYATTPLANS.COM and the designer/architect have no control over the construction materials, methods, or sequencing by the builder. For these reasons, as well as the gross variations in local building codes, Boyatt Gallery of Homes assumes no responsibility for any discrepancies that may arise during construction. We strongly recommend that you, the homeowner, have these drawings thoroughly reviewed by a licensed architect, professional engineer, certified residential designer or general contractor licensed to practice in your area, in addition to your local building officials, prior to beginning construction.

THE OWNER OR CONTRACTOR:
SHALL BE TOTALLY RESPONSIBLE FOR THE CONSTRUCTION PHASE OF THIS PROJECT AND STRICTLY FOLLOW THE LOCAL BUILDING CODES AND ORDINANCES. THEY SHALL ALSO NOTIFY THE DESIGNER IN WRITING FOR ANY VARIANCE IN DESIGN, ZONE, OR NON-CONFORMANCE OF SUCH CODES AND ORDINANCES IN THE CONSTRUCTION DOCUMENTS PRIOR TO COMMENCEMENT OF CONSTRUCTION.

THE DESIGNER RECORD:
HAS NOT BEEN RETAINED AND IS NOT RESPONSIBLE FOR THE COORDINATION OF THE TRADE OR THEIR CONSTRUCTION METHODS, FIELD SUPERVISION, JOB SAFETY (OSHA) OR LIEN/LABOR LAW REQUIREMENTS AND ALL SUCH MATTERS SHALL BE THE ABSOLUTE RESPONSIBILITY OF THE OWNER, GENERAL CONTRACTOR, OR THEIR DESIGNEE.

ANY REPRODUCTION OF THESE PRINTS IS PROHIBITED BY FEDERAL COPYRIGHT LAWS. ANY ILLEGAL REPRODUCTION WILL BE AGGRESSIVELY PURSUED TO THE FULLEST EXTENT OF THE COPYRIGHT LAW.
©THE BOYATT GALLERY OF HOMES

BOYATTPLANS.COM
HEREBY RESERVES IT'S COMMON LAW COPYRIGHT AND OTHER PROPERTY RIGHT IN THESE PLANS, IDEAS AND DESIGNS. THESE PLANS, IDEAS AND DESIGNS ARE NOT TO BE REPRODUCED, CHANGED OR COPIED IN ANY FORM OR MANNER WHATSOEVER, NOR ARE THEY TO BE ASSIGNED TO ANY THIRD PARTY, WITHOUT FIRST OBTAINING THE EXPRESSED WRITTEN CONSENT OF THE BGH. WRITTEN DIMENSIONS ON THESE DRAWINGS SHALL HAVE PRECEDENCE OVER SCALED DIMENSIONS. CONTRACTORS SHALL VERIFY AND BE RESPONSIBLE FOR ALL DIMENSIONS AND CONDITIONS OF THE JOB AND BOYATTPLANS MUST BE NOTIFIED IN WRITING OF ANY VARIATION FROM THE DIMENSIONS, CONDITIONS AND SPECIFICATIONS SHOWN BY THESE DRAWINGS. ALL CONSTRUCTION SHALL BE IN ACCORDANCE WITH STATE AND LOCAL CODES.

SECTIONS

DO NOT SCALE DRAWINGS USE GIVEN DIMENSIONS. Report Any Discrepancies Of Dimensions To The Architect Or Construction Superintendent Before Proceeding with work

DATE:	2004
PROJECT #:	BGH-1001-2
DRAWN BY:	bgh
CHECKED BY:	
REVISIONS:	

SHEET #: A-8